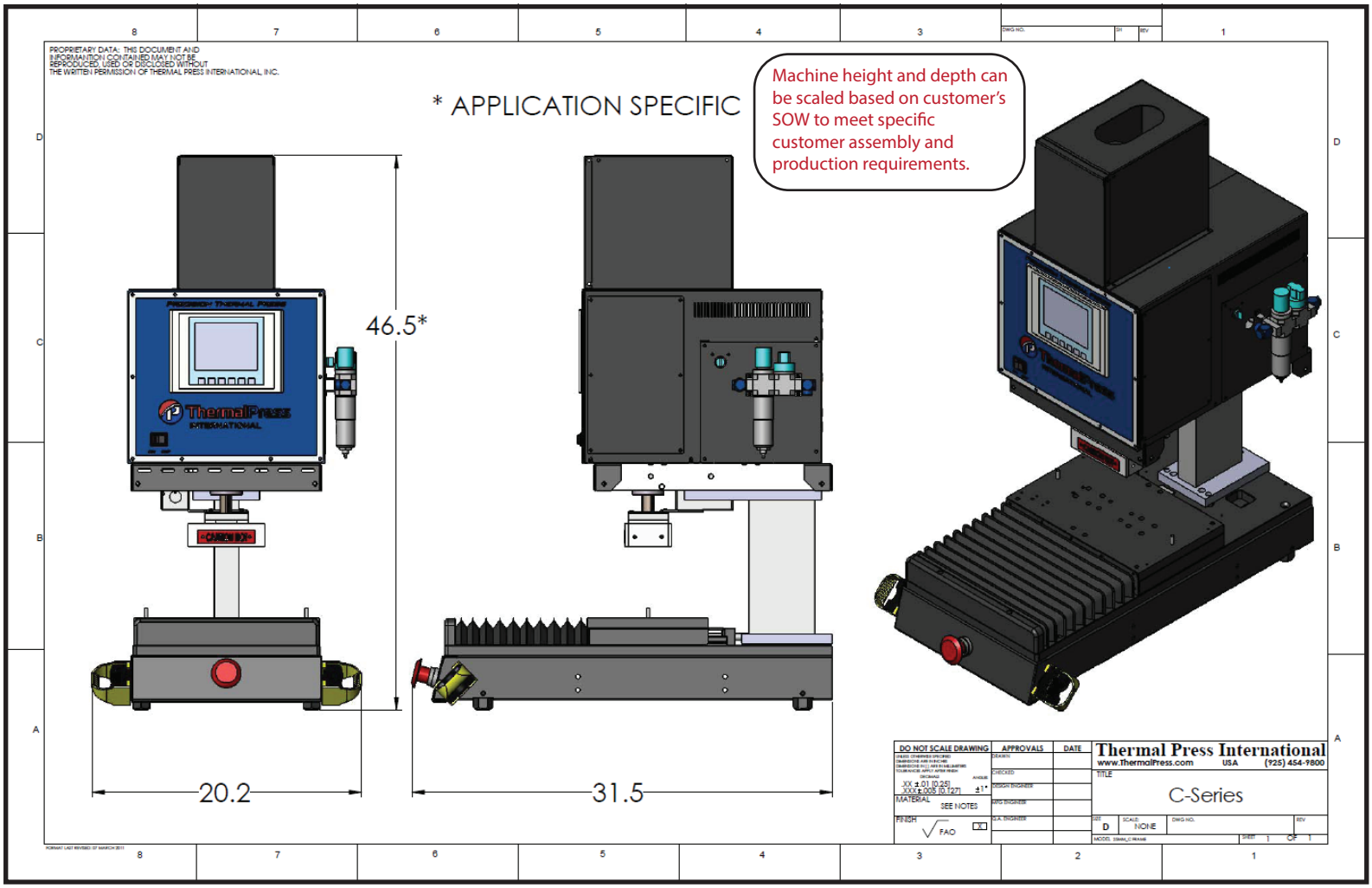

SPECIFICATIONS:

- Electrical:
  - (Standard) 220VAC (15A MAX)
  - (Optional) 120VAC (15A MAX)
  - (Custom) 220VAC (15A MAX)

- *Pneumatic (MAX):
  - 10-100 psi (0.7-7 bar), 2-4 SCFM

- Standard Stroke: 4 inches (102 mm)

- *Throat Depth: 7.5 inches (190 mm)

- *Column Height: 8+ inches (203+ mm)

- *Force Output (MAX):
  - Model C25 = 300 lbs (136 kgs)
  - Model C50 = 1000 lbs (450 kgs)

- *Weight (est): 175-250 lbs (75-114 kgs)

- *Work Surface Requirements:
  - 24"W x 32"D x 30"H

***Specifications May Vary**

FEATURES:

- Open format "C-Frame" Construction

- HMI Color Touchscreen (Operation & Setup)

- Recipe Storage via HMI Touchscreen

- HMI with Multi-Programmable USER/PW

- Integrated Digital PID Temperature Controls

- Integrated Timers & Linear Positional Data

- Programmable Process Parameter Alarms

- Programmable Digitally Controlled Motion

- OSHA, CE, NFPE, and NEC compliant

- Industry Leading 3 Year Warranty

***Note: Thermal Press International's machines are configured and delivered with application specific engineered tooling packages. Actual dimensions and details will vary based upon the tooling and options included with the system. Thermal Press International provides design reviews of the equipment and tooling packages prior to the manufacturing of the equipment.**